Encore® LT Manual Powder Spray Gun

1106893: Spray Gun Assembly with 6-m Cable

Refer to manual part number **1604857** for complete parts and service information, go to *emanuals.nordson.com* or scan the QR code with any mobile device.

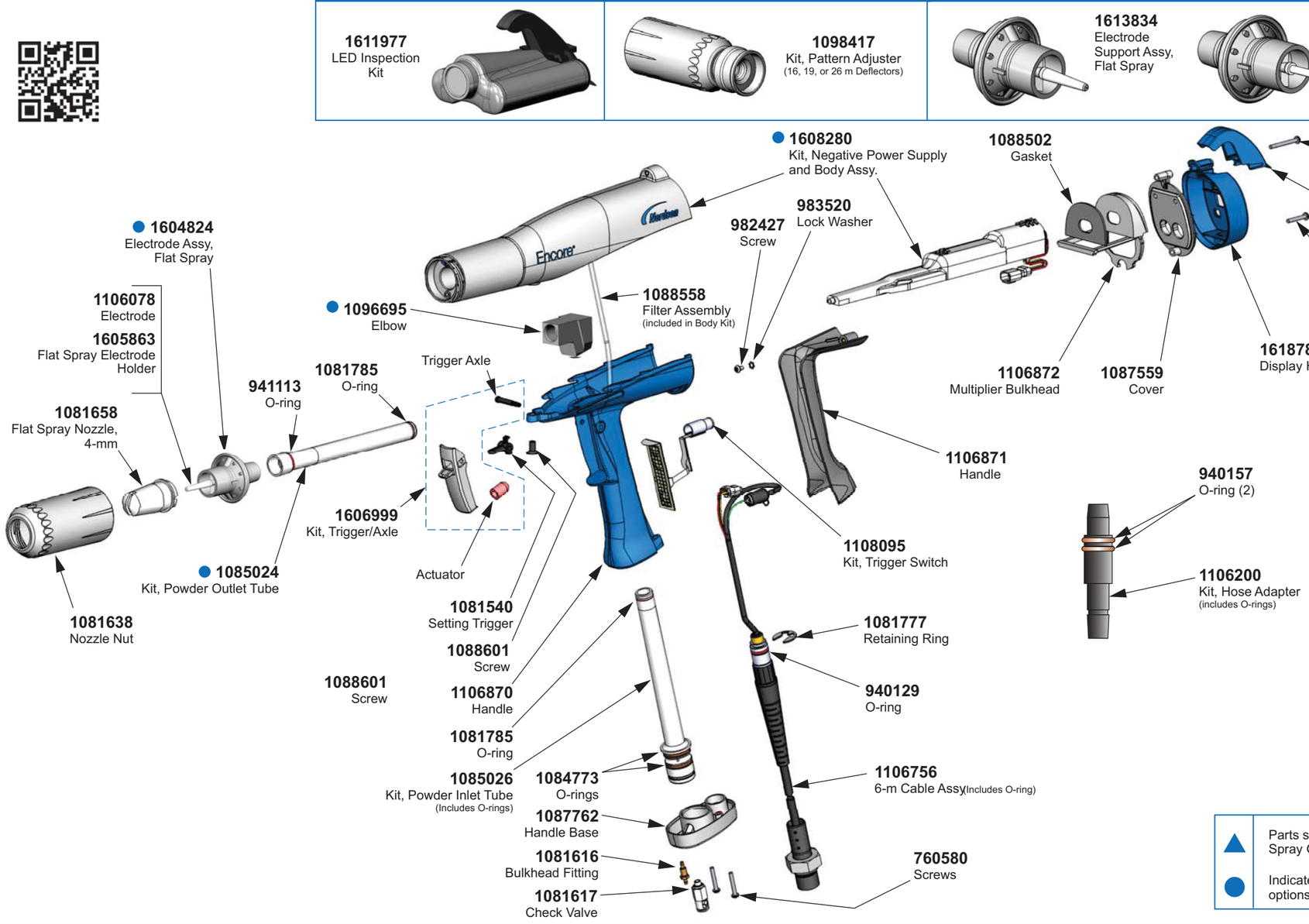

Additional Options Available for Sale

nLighten™

1611977
LED Inspection Kit

Pattern Adjuster Kit

1098417
Kit, Pattern Adjuster
(16, 19, or 26 m Deflectors)

XD Electrode Support

1613834
Electrode Support Assy, Flat Spray

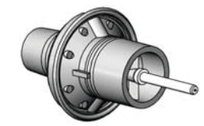

1613835
Electrode Support Assy, Conical Spray

Flat Spray Nozzle

1081656
2.5-mm

1081657
3-mm

▲ **1081658**
4-mm

1081659
6-mm

Lance Extensions

Lance Extensions:

1609888: 150-mm Extension
1609889: 300-mm Extension
1609896: 400-mm Extension
1609897: 600-mm Extension

Pattern Adjuster, Lance Extensions:

1100012: Pattern adjuster kit for lance extension

Cross-Cut Nozzle

1082184
60 Degree

1082185
90 Degree

1082186
2.5-mm Castle

Application Specific:

1609053: Positive power supply

(sold separately from Spray Gun Body)

Other Options:

1096698: Wear resistant outlet tube kit

1096696: Impact resistant elbow

1085168: 6-m Cable Extension

1613306: 12-m Cable

1106676: Conical electrode assembly
(includes electrode, electrode support and conical electrode holder)

1604828: Conical nozzle conversion kit
(shipped with spray gun and includes conical nozzle, conical electrode holder and 26-mm deflector)

Conical Deflectors

1083201
16-mm

▲ **1083205**
19-mm

▲ **1083206**
26-mm

1083207
38-mm

Conical Nozzle

1082060
Conical Nozzle

Conical Electrode Holder

1605861
Conical Electrode Holder

Both parts required for use with Conical Deflectors and Lance Extensions

▲ Parts shipped with Spray Gun

● Indicates additional options for sale

Nordson Canada, Limited
1211 Denison Street • Markham, Ontario L3R 4B3
(800) 463-3200 • www.nordson.ca

Nordson Corporation Customer Service
300 Nordson Drive • Amherst, OH 44001 • (800) 433-9319
E-Mail: finishing_csc@nordson.com • www.nordson.com

Nordson Deutschland GmbH
Heinrich-Hertz-Straße 42 • 40699 Erkath, Germany • 49-211-9205-0
E-Mail: powder.systems@de.nordson.com • www.nordson-finishing-eu.com

©2020 Nordson Corporation, All rights reserved

P/N 1108186-10, Issued 01/20